APsystems
ALTENERGY POWER

Leading the Industry in
Solar Microinverter Technology

YC500A

Microinverter

- Single unit connects two solar modules
- Individual MPPT for each module
- Maximum output power 500W

DIMENSIONS

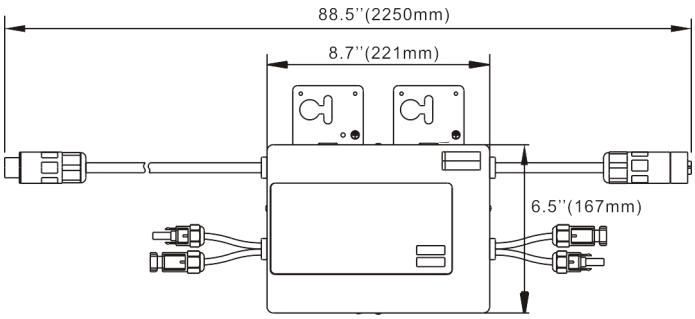

Our flagship product, the APsystems YC500A is a grid-tied microinverter with intelligent networking and monitoring systems to ensure maximum efficiency. Highly dependable and cost effective, the YC500A delivers 250W AC per module with dual MPPT. Half the inverters and half the installation means real cost savings for residential and commercial customers.

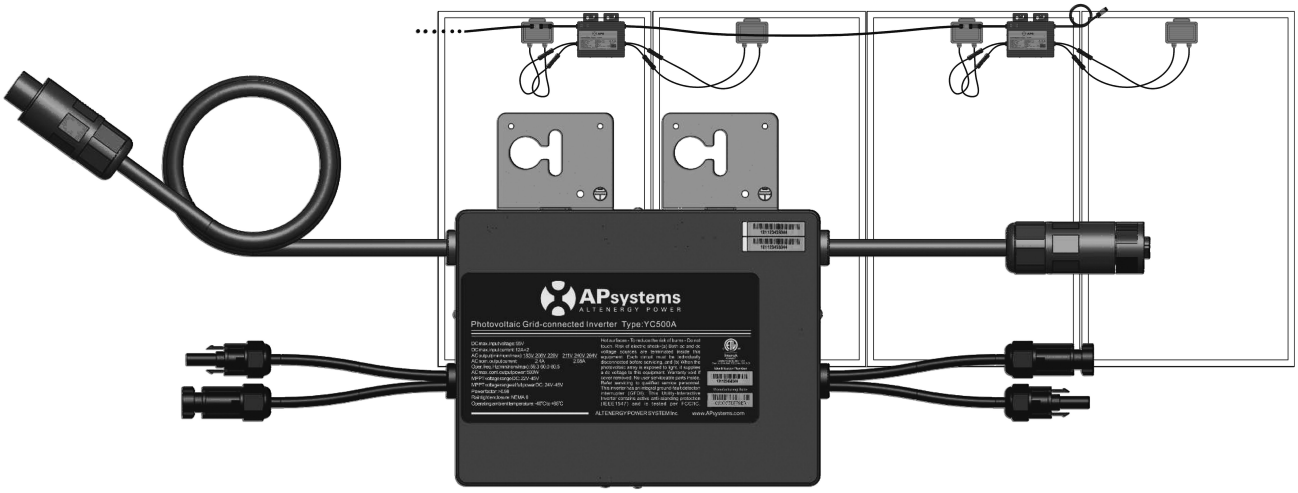

YC500A Microinverter Datasheet

Region	Sri Lanka
Model	YC500A-LK
Input Data (DC)	
MPPT Voltage Range	22V-45V
Operation Voltage Range	16V-52V
Maximum Input Voltage	55V
Startup Voltage	22V
Maximum Input Current	10.5A x 2
Output Data (AC)	
Maximum Output Power	500W
Nominal Output Voltage	230V
Maximum Continuous Output Current	2.17A
Default Output Voltage Range	195.5V-253V*
Extended Output Voltage Range	149V-278V
Nominal Output Frequency	50Hz
Default Output Frequency Range	49Hz-51Hz*
Extended Output Frequency Range	45.1Hz -54.9Hz
Power Factor	>0.99
Total Harmonic Distortion	<3%
Maximum Units per Branch	11 for 25A Breaker**
Efficiency	
Max. Inverter Efficiency	95.5%
Night Power Consumption	120mW
Mechanical Data	
Operating Ambient Temperature Range	-40 °F to +149 °F (-40 °C to +65 °C)
Storage Temperature Range	-40 °F to +185 °F (-40 °C to +85 °C)
Dimensions (W x H x D)	221mm x 167mm x 29mm (8.7” x 6.6” x 1.1”)
Weight	5.5lbs/2.5kg
Enclosure Rating	IP67
Cooling	Natural Convection - No Fans
Features & Compliance	
Communication	Power Line Communication
Monitoring	Via EMA Software
Grid Connection Compliance	IEC 61727

Specifications subject to change without notice - please ensure you are using the most recent update found at www.APsystems.com

*Programmable through ECU to meet customer need.
**Depending on the local regulations.

© All Rights Reserved

B403 No.188, Zhangyang Road, Pudong, Shanghai | +86 21 3392 8205 | **APsystems.com**